GANG SONG

SMT Unshielded Power Inductors
GS3308DF / GS3316DF / GS3340DF / GS5022DF

Features (特長)

- Open Magnetic circuit construction (開磁路構造設計)
- Compact and thin (輕便薄小)
- Mn-Zn material core (錳鋅材之鐵芯)
- Available in various sizes (多種尺寸可供選擇)

Applications (用途)

- Notebook, VGA card, DC/DC converter, PDA (筆記型電腦、電腦顯示卡、直流轉換器、PDA)

Product Identification (產品識別)

GS3308DF – _____ ____ (Ex. GS3308DF-100M)

1 2 3

1. SMT Unshielded Power Inductors (開放式功率電感) (GS3308DF, GS3316DF, GS3340DF, GS5022DF)
2. Inductance (電感值)
3. Tolerance (誤差值) (參照表 K 10%, L 15%, M 20%, N 30%)

GANG SONG

SMT Unshielded Power Inductors
GS3308DF / GS3316DF / GS3340DF / GS5022DF

Configurations & Dimensions (結構圖及規格尺寸)

GS3308DF / GS3316DF / GS3340DF

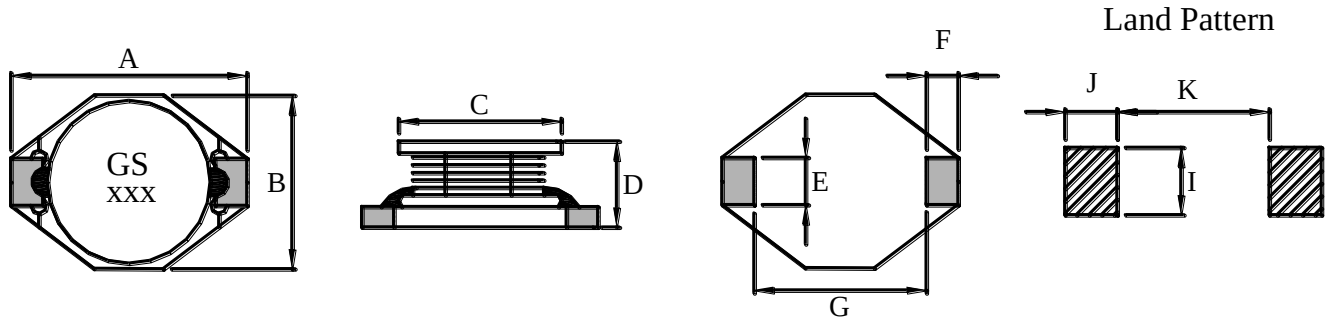

GS5022DF

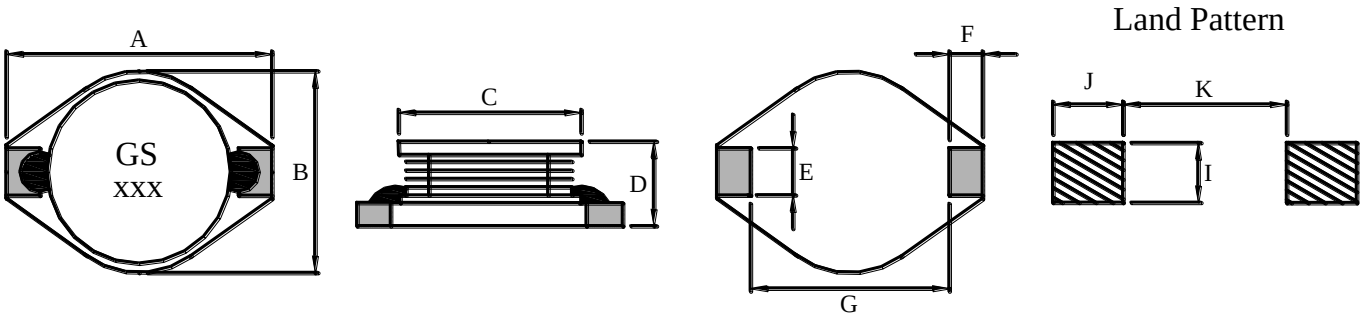

Unit In mm

Type (型式)	A (max)	B (max)	C ±0.3	D (max)	E ±0.3	F ±0.3	G ±0.3	I	J	K
GS3308DF	12.95	9.40	8.38	3.00	2.54	2.54	7.62	2.79	3.04	7.37
GS3316DF	12.95	9.40	8.38	5.21	2.54	2.54	7.62	2.79	3.04	7.37
GS3340DF	12.95	9.40	8.38	11.43	2.54	2.54	7.62	2.79	3.04	7.37
GS5022DF	18.54	15.24	12.70	7.11	2.54	2.54	12.70	2.79	3.30	12.45

♣Design as Customer's Requested Specifications. (可依客戶特殊需求設計)

GANG SONG

SMT Unshielded Power Inductors
GS3308DF

Electrical Characteristics for GS3308DF Series [GS3308DF 系列電子特性規格]

Part Number 產 品 料 號	Inductance (μH) 電 感 值 (L)	Test Freq. (KHz) 測 試 頻 率	DCR (Ω) (max) 直 流 阻 抗	IDC (A) (max) 定 格 電 流
GS3308DF – 100M	10.00	100	0.110	2.40
GS3308DF – 150M	15.00	100	0.150	2.00
GS3308DF – 220M	22.00	100	0.230	1.60
GS3308DF – 330M	33.00	100	0.300	1.40
GS3308DF – 470M	47.00	100	0.390	1.00
GS3308DF – 680M	68.00	100	0.660	0.90
GS3308DF – 101M	100.00	100	0.840	0.70
GS3308DF – 151M	150.00	100	1.200	0.60
GS3308DF – 221M	220.00	100	1.900	0.50
GS3308DF – 331M	330.00	100	2.700	0.40
GS3308DF – 471M	470.00	100	4.000	0.30
GS3308DF – 681M	680.00	100	5.300	0.20
GS3308DF – 102M	1000.00	100	8.400	0.10

※Test Freq. : 100KHz / 0.1V.
※Operating Temp. : －40℃ ~ ＋125℃
※Inductance drop = 10% typ. at IDC.
※Storage Temperature&Humidity : ≦ 40℃ & 70% RH maximum

GANG SONG

SMT Unshielded Power Inductors
GS3316DF

Electrical Characteristics for GS3316DF Series [GS3316DF 系列電子特性規格]

Part Number 產 品 料 號	Inductance (μH) 電感值 (L)	Test Freq. (KHz) 測試頻率	DCR (Ω) (max) 直流阻抗	IDC (A) (max) 定格電流
GS3316DF – 1R0M	1.00	100	0.009	9.00
GS3316DF – 1R5M	1.50	100	0.010	8.00
GS3316DF – 2R2M	2.20	100	0.012	7.00
GS3316DF – 3R3M	3.30	100	0.015	6.40
GS3316DF – 4R7M	4.70	100	0.018	5.40
GS3316DF – 6R8M	6.80	100	0.027	4.60
GS3316DF – 100M	10.00	100	0.038	3.80
GS3316DF – 150M	15.00	100	0.046	3.00
GS3316DF – 220M	22.00	100	0.085	2.60
GS3316DF – 330M	33.00	100	0.100	2.00
GS3316DF – 470M	47.00	100	0.140	1.60
GS3316DF – 680M	68.00	100	0.200	1.40
GS3316DF – 101M	100.00	100	0.280	1.20
GS3316DF – 151M	150.00	100	0.400	1.00
GS3316DF – 221M	220.00	100	0.610	0.80
GS3316DF – 331M	330.00	100	1.020	0.60
GS3316DF – 471M	470.00	100	1.270	0.50
GS3316DF – 681M	680.00	100	2.020	0.40
GS3316DF – 102M	1000.00	100	3.000	0.30

GS3340DF

Electrical Characteristics for GS3340DF Series [GS3340DF 系列電子特性規格]

Part Number 產 品 料 號	Inductance (μH) 電 感 值 (L)	Test Freq. (KHz) 測 試 頻 率	DCR (Ω) (max) 直 流 阻 抗	IDC (A) (max) 定 格 電 流
GS3340DF – 100M	10.00	100	0.040	8.00
GS3340DF – 150M	15.00	100	0.050	7.00
GS3340DF – 220M	22.00	100	0.066	5.50
GS3340DF – 330M	33.00	100	0.080	4.00
GS3340DF – 470M	47.00	100	0.110	3.80
GS3340DF – 680M	68.00	100	0.170	3.00
GS3340DF – 101M	100.00	100	0.220	2.50
GS3340DF – 151M	150.00	100	0.340	2.00
GS3340DF – 221M	220.00	100	0.440	1.60
GS3340DF – 331M	330.00	100	0.700	1.20
GS3340DF – 471M	470.00	100	0.950	1.00
GS3340DF – 681M	680.00	100	1.200	1.00
GS3340DF – 102M	1000.00	100	2.000	0.80

※Test Freq. : 100KHz / 0.1V.
※Operating Temp. : －40℃ ~ ＋125℃
※Inductance drop = 10% typ. at IDC.
※Storage Temperature&Humidity : ≦ 40℃ & 70% RH maximum

GANG SONG

SMT Unshielded Power Inductors
GS5022DF

Electrical Characteristics for GS5022DF Series [GS5022DF 系列電子特性規格]

Part Number 產 品 料 號	Inductance (μH) 電 感 值 (L)	Test Freq. (KHz) 測 試 頻 率	DCR (Ω) (max) 直 流 阻 抗	IDC (A) (max) 定 格 電 流
GS5022DF – 1R0M	1.00	100	0.009	20.00
GS5022DF – 2R2M	2.20	100	0.014	16.00
GS5022DF – 3R3M	3.30	100	0.015	14.00
GS5022DF – 5R6M	5.60	100	0.020	12.00
GS5022DF – 100M	10.00	100	0.031	10.00
GS5022DF – 150M	15.00	100	0.036	8.00
GS5022DF – 220M	22.00	100	0.047	7.00
GS5022DF – 330M	33.00	100	0.066	5.50
GS5022DF – 470M	47.00	100	0.086	4.50
GS5022DF – 680M	68.00	100	0.130	3.50
GS5022DF – 101M	100.00	100	0.190	3.00
GS5022DF – 151M	150.00	100	0.250	2.60
GS5022DF – 221M	220.00	100	0.380	2.40
GS5022DF – 331M	330.00	100	0.560	1.90
GS5022DF – 471M	470.00	100	0.850	1.40
GS5022DF – 681M	680.00	100	1.100	1.20
GS5022DF – 102M	1000.00	100	1.800	1.00

※Test Freq. : 100KHz / 0.1V.
※Operating Temp. : －40℃ ~ ＋125℃
※Inductance drop = 10% typ. at IDC.
※Storage Temperature&Humidity : ≦ 40℃ & 70% RH maximum